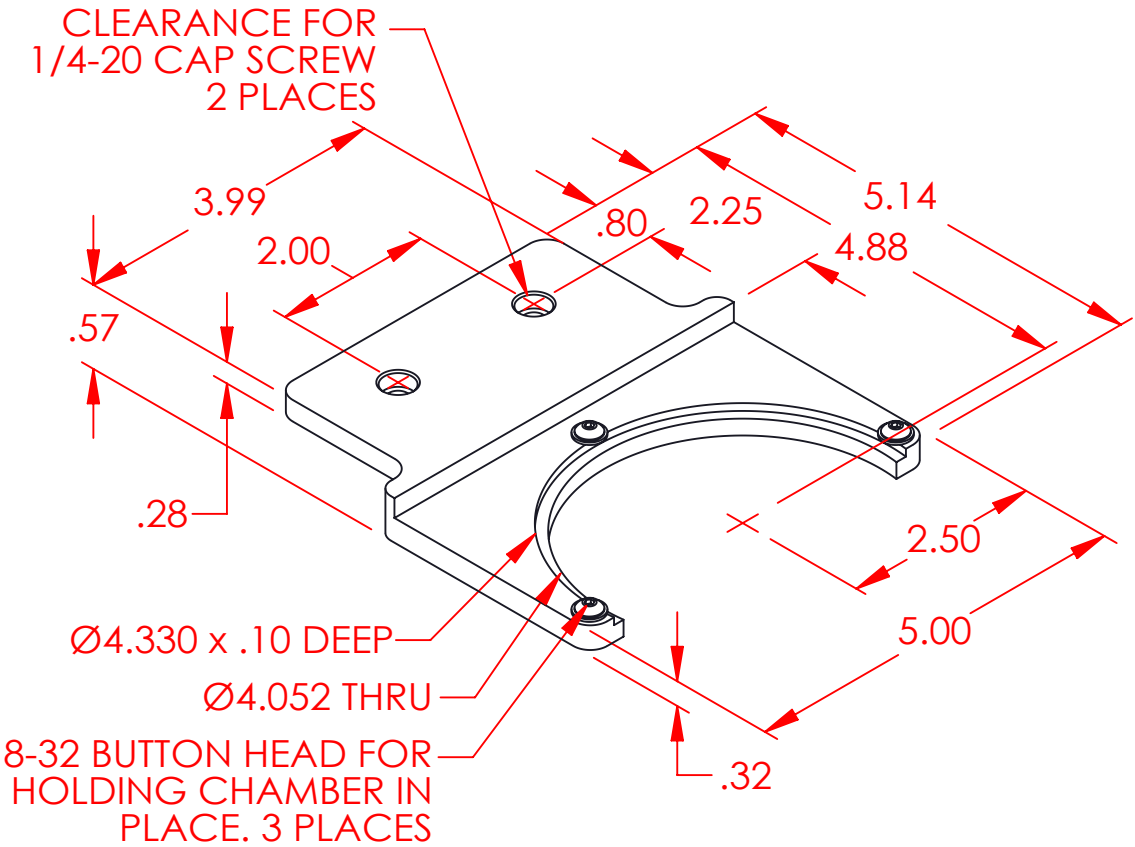
CLEARANCE FOR
1/4-20 CAP SCREW
2 PLACES
3.99
2.00
.80
2.25
5.14
4.88
.57
.28
2.50
5.00
Ø4.330 x .10 DEEP
Ø4.052 THRU
8-32 BUTTON HEAD FOR
HOLDING CHAMBER IN
PLACE. 3 PLACES
.32