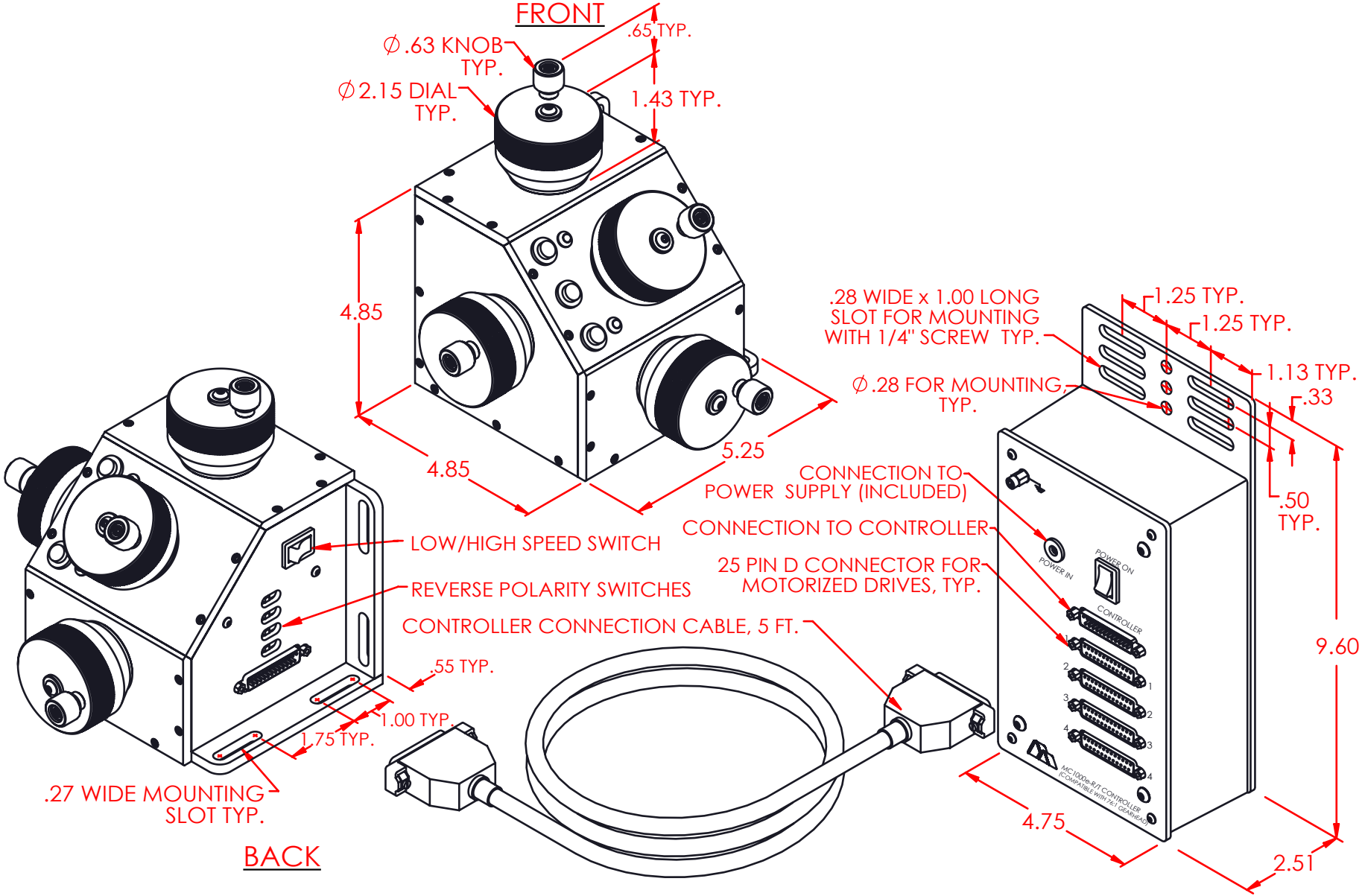
FRONT
∅.63 KNOB TYP.
∅2.15 DIAL TYP.
.65 TYP.
1.43 TYP.
4.85
4.85
5.25
.28 WIDE x 1.00 LONG SLOT FOR MOUNTING WITH 1/4" SCREW TYP.
∅.28 FOR MOUNTING TYP.
1.25 TYP.
1.25 TYP.
1.13 TYP.
.33
.50 TYP.
9.60
CONNECTION TO POWER SUPPLY (INCLUDED)
CONNECTION TO CONTROLLER
25 PIN D CONNECTOR FOR MOTORIZED DRIVES, TYP.
POWER IN
POWER ON
CONTROLLER
MC1000e-R/T CONTROLLER
(COMPATIBLE WITH 761 GEARHEAD)
LOW/HIGH SPEED SWITCH
REVERSE POLARITY SWITCHES
CONTROLLER CONNECTION CABLE, 5 FT.
.55 TYP.
1.00 TYP.
1.75 TYP.
.27 WIDE MOUNTING SLOT TYP.
BACK
4.75
2.51