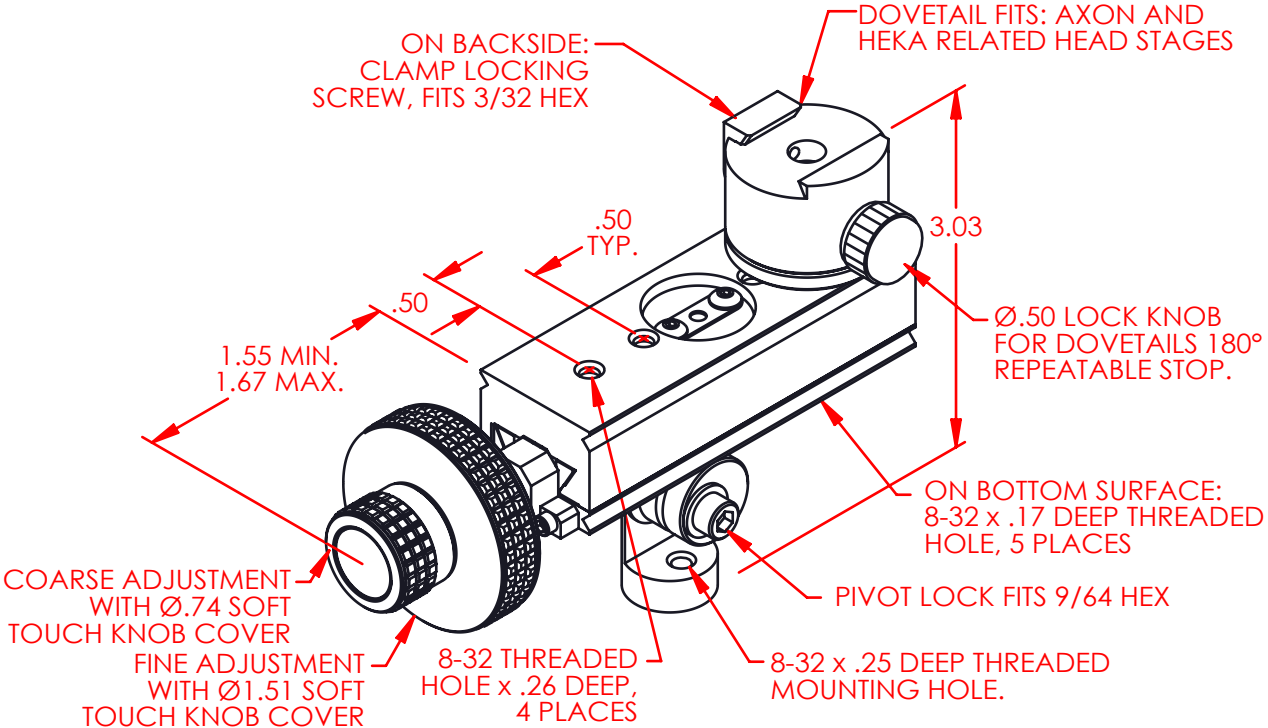
DOVETAIL FITS: AXON AND HEKA RELATED HEAD STAGES
ON BACKSIDE: CLAMP LOCKING SCREW, FITS 3/32 HEX
.50 TYP.
3.03
.50
1.55 MIN. 1.67 MAX.
Ø.50 LOCK KNOB FOR DOVETAILS 180° REPEATABLE STOP.
ON BOTTOM SURFACE: 8-32 x .17 DEEP THREADED HOLE, 5 PLACES
PIVOT LOCK FITS 9/64 HEX
COARSE ADJUSTMENT WITH Ø.74 SOFT TOUCH KNOB COVER
FINE ADJUSTMENT WITH Ø1.51 SOFT TOUCH KNOB COVER
8-32 THREADED HOLE x .26 DEEP, 4 PLACES
8-32 x .25 DEEP THREADED MOUNTING HOLE.